RAJ - Regał 01

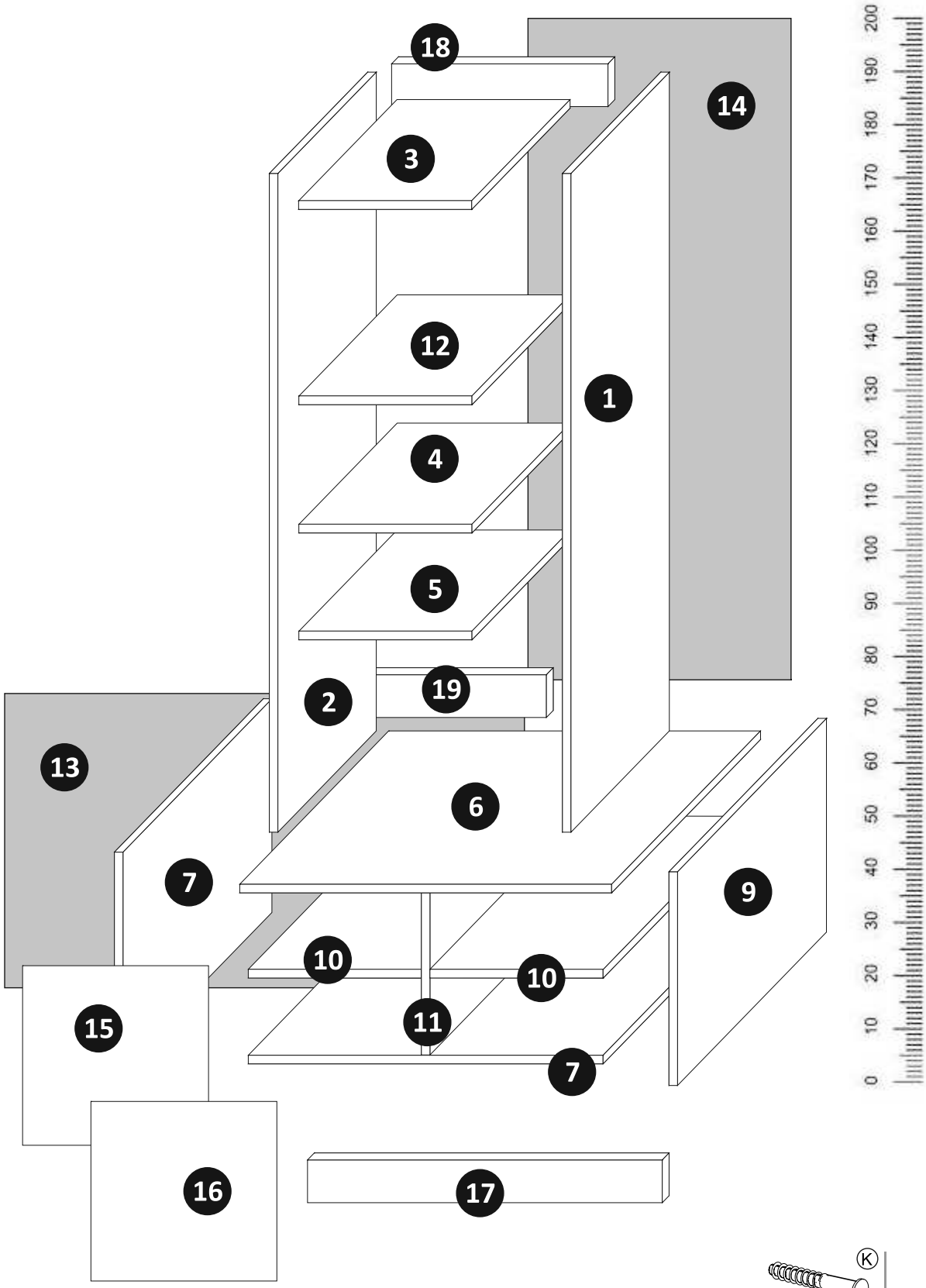
18
14
3
12
1
4
5
19
2
13
6
7
9
10
10
15
11
7
16
17

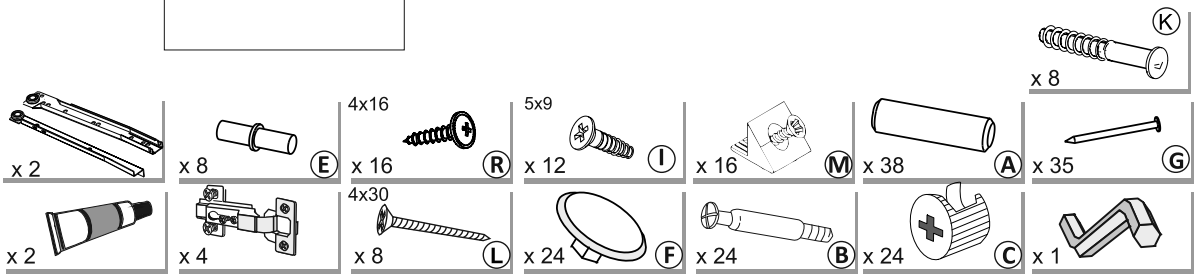
K
x 8
x 2
x 8
E
4x16
x 16
R
5x9
x 12
I
x 16
M
x 38
A
x 35
G
x 2
x 4
4x30
x 8
L
x 24
F
x 24
B
x 24
C
x 1

1

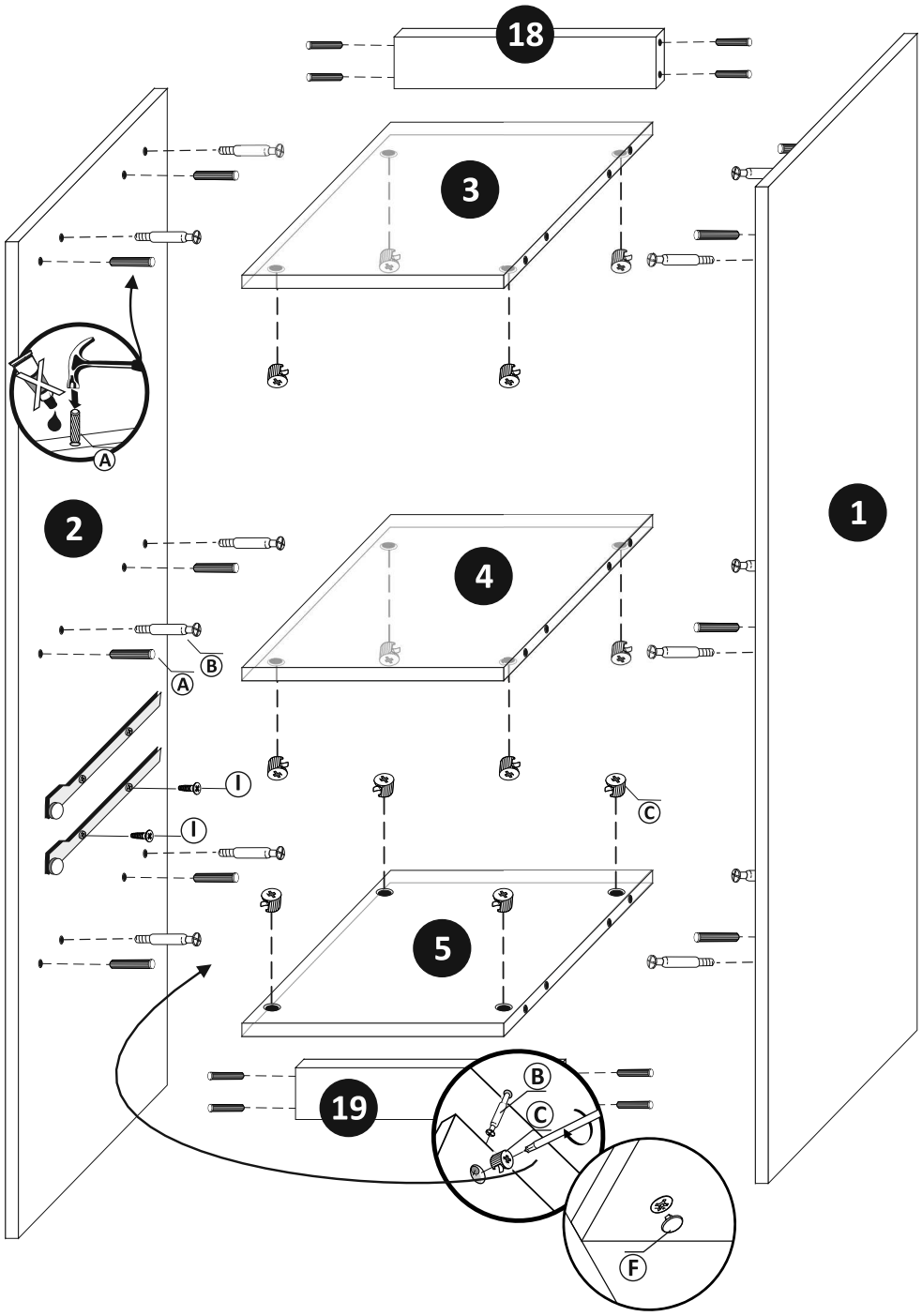

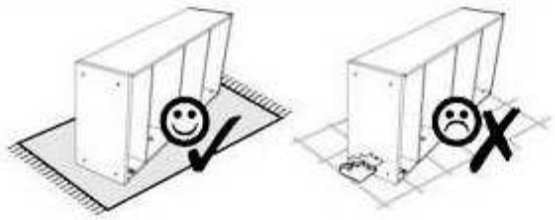

3

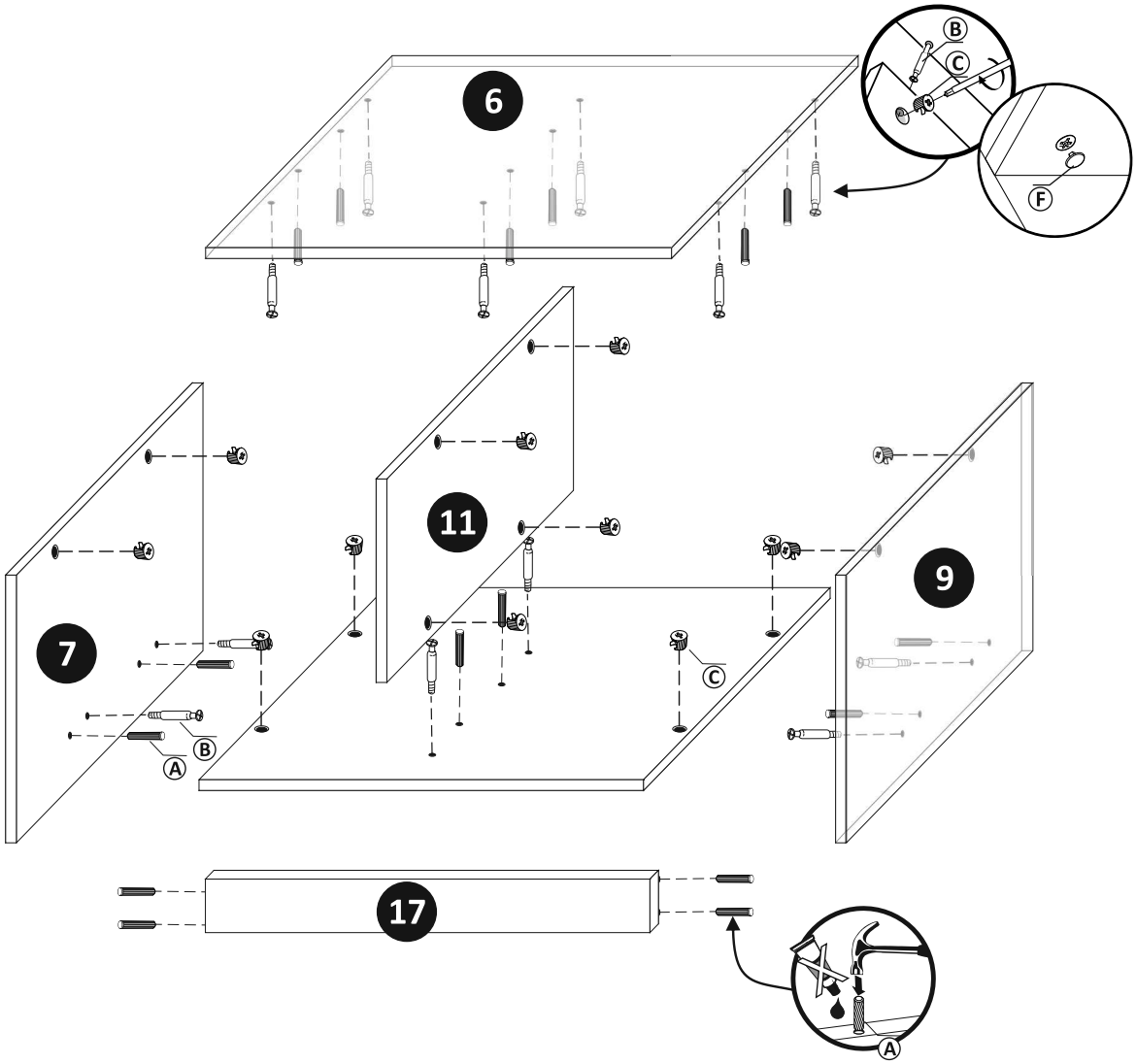

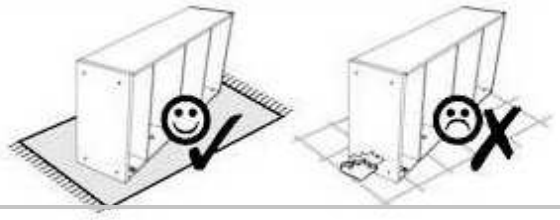

4

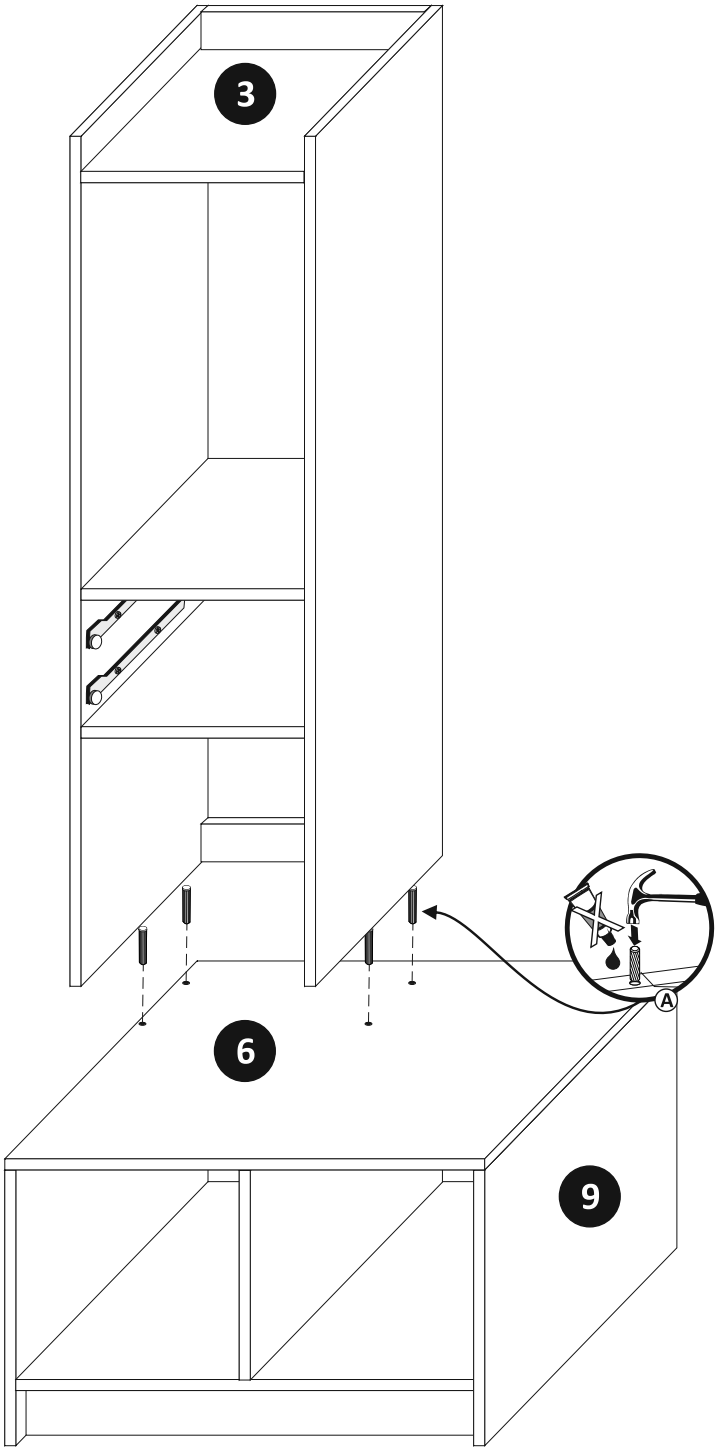

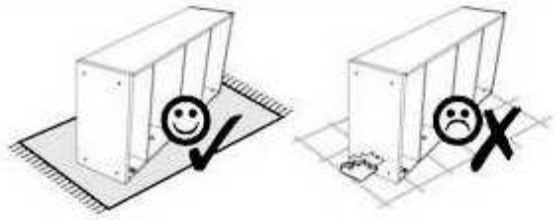

5

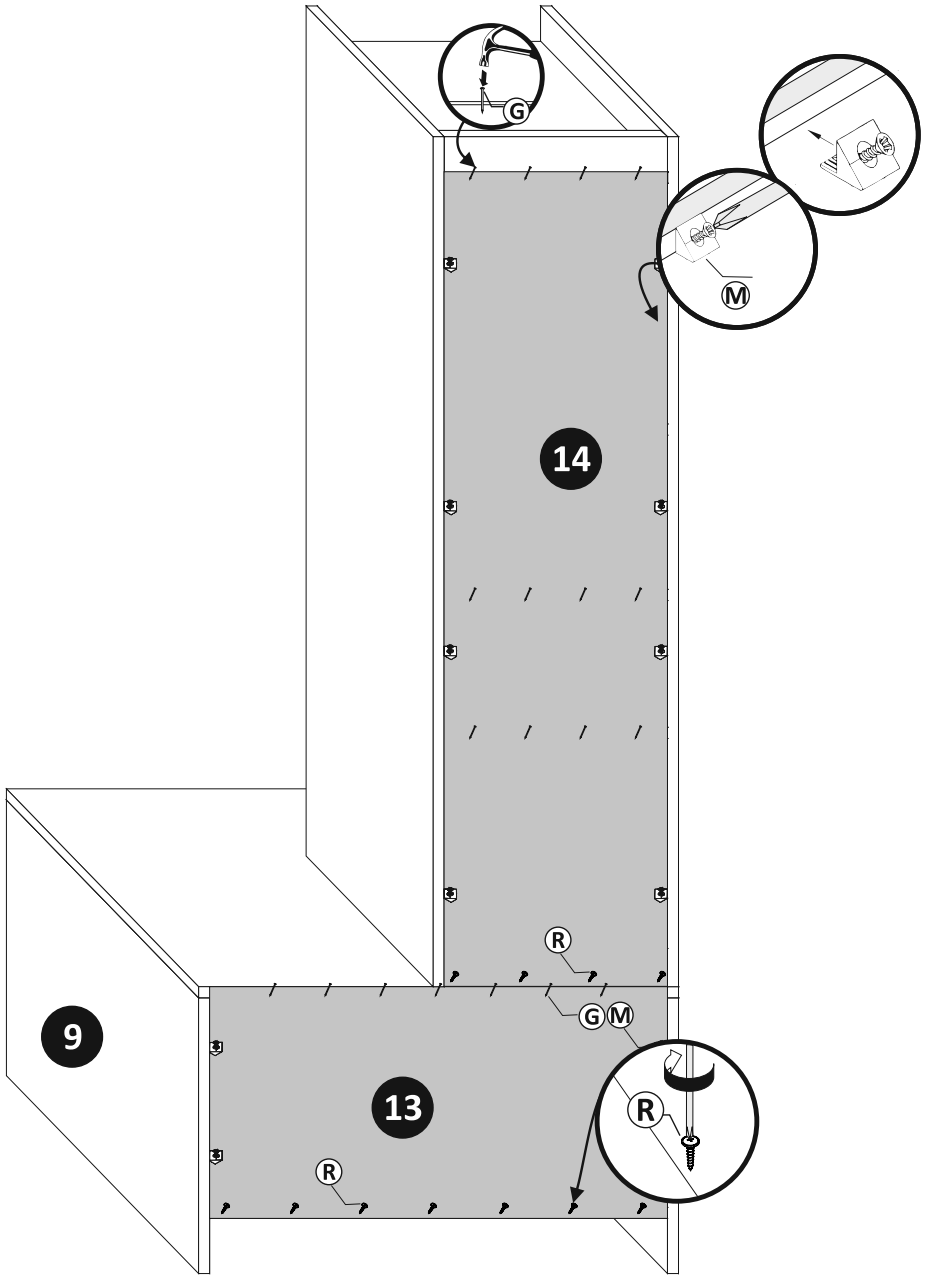

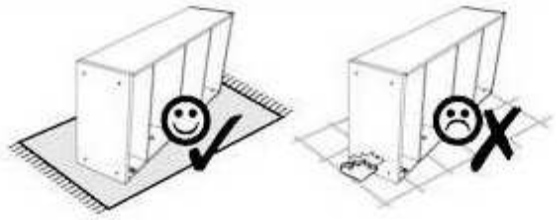
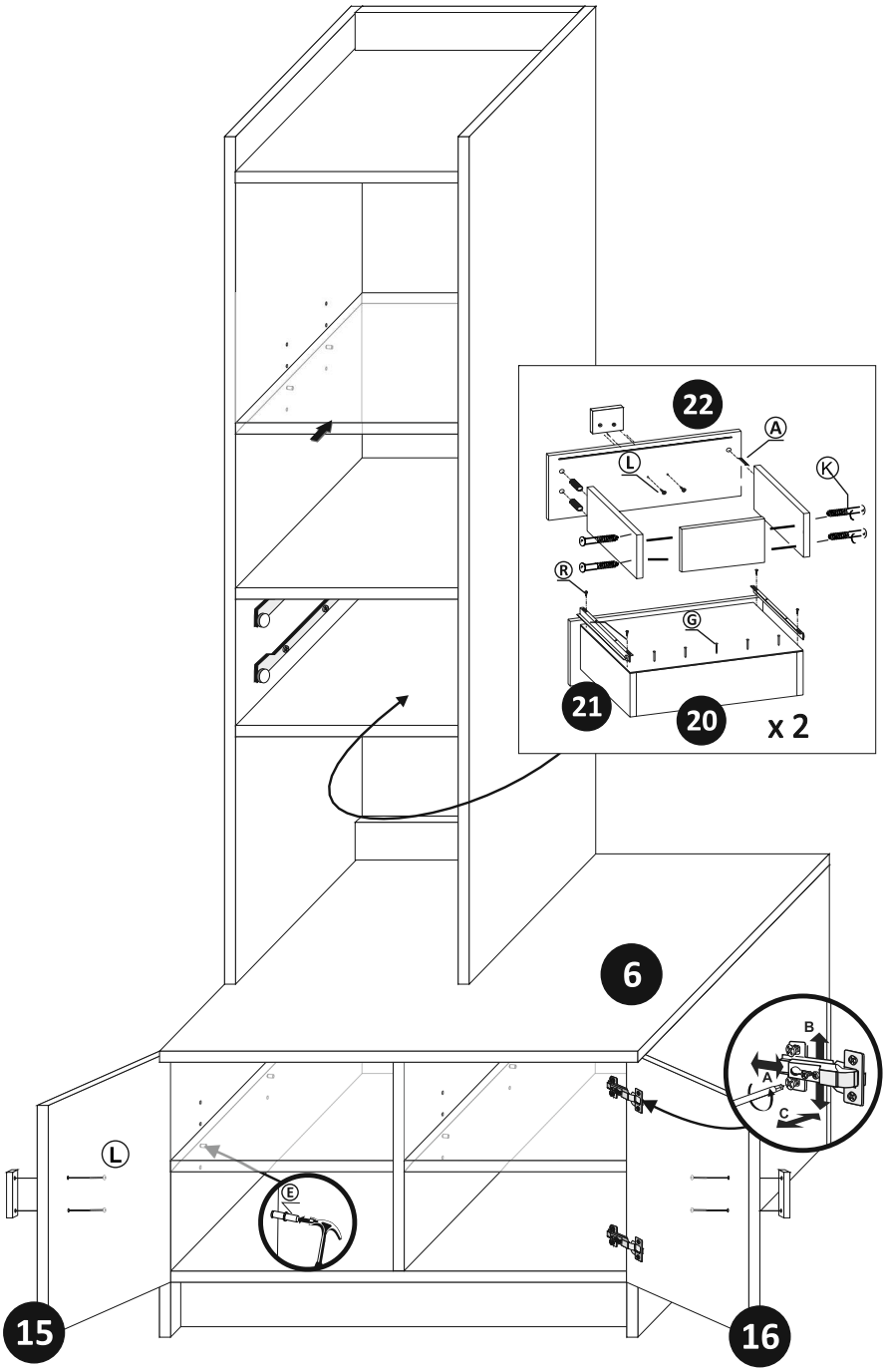
6